三 墾 力 達

LeaderSamco

VM06

400V 1.5kW-315kW

LeaderSamco

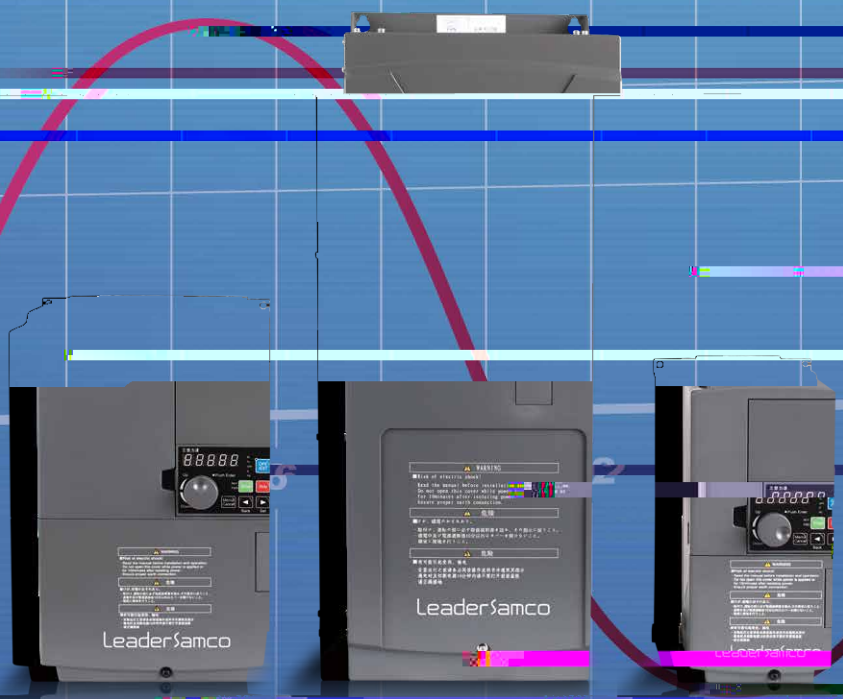

PG

- 32bit DSP
- PG
- Modbus
- /
- 4~20mA
- Point-to-point

VM06 1 PG

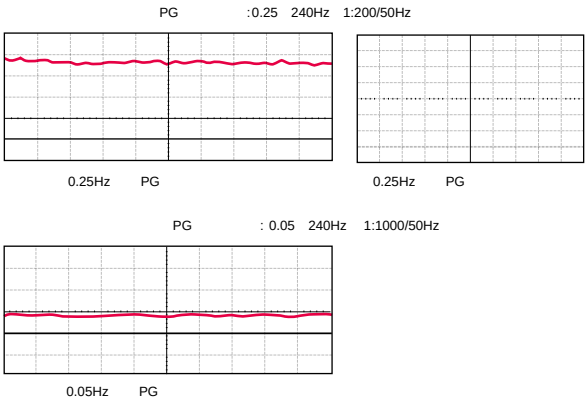

* PG

32bit DSP

VM06

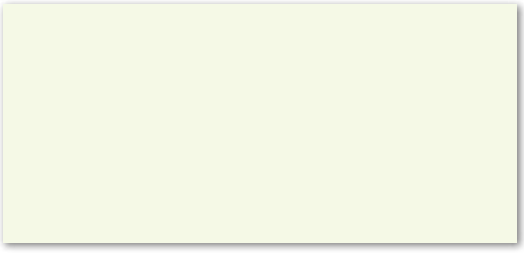

PG	100rad/s	±0.5%
PG	250rad/s	±0.01%

B (120% 1) A (150% 1)

VM06 V/f PG
PG PG PG
6 SC-PG2

VM06 100%

	V/f	PG	PG
	○	○	○
	X	○	○
	X	○	X
	1 500	1 1000	1 200
	10-20rad/s	250rad/s	100rad/s
	( )	( )	( )

“ ”

“ ”

VM06

2 PID

PID1 PID2 2 PID
PID

PID

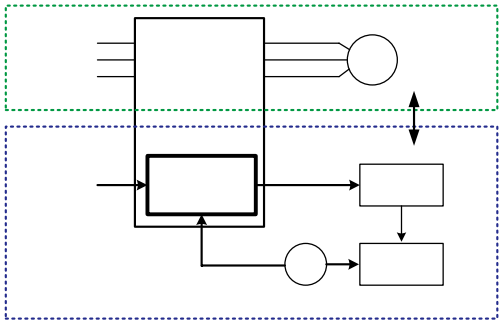

16

8 16
16

S

2 S
3

200%

VM06

16

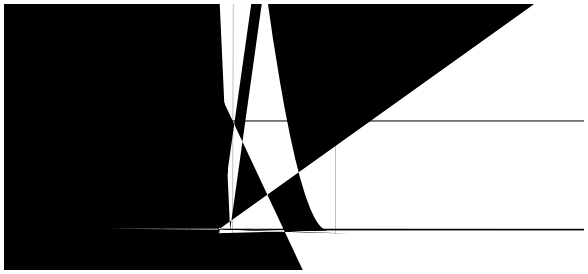

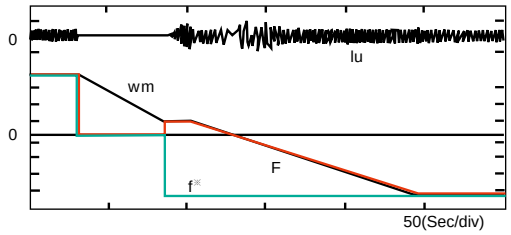

VM06

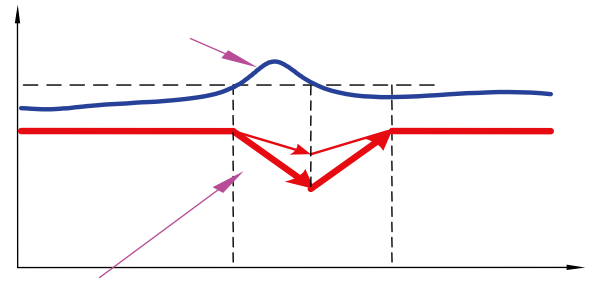

3

1

2 3

LED+LCD LCD

VM06 LED LCD

SC-MOP

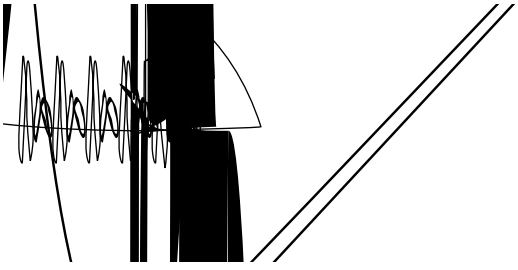

200% 3s

( )

			V/f
[1]		PG	0.05Hz 240Hz(1 1000/50Hz) [5]
		PG	0.25Hz 240Hz(1 200/50Hz) [5]
	/	PG	250rad/sec ±0.01%
		PG	100rad/sec ±0.5%
		PG	1 50( )
		PG	1 20( )
		PG	±10%( )
		PG	±20%( )
			0.01Hz <nЏՖ r ~
			0.05%(12bit0 10V 4 20mA) 0.1%(11bit0 5V 4 20mA)
			±0.01%(-10 40)
			±0.2%(25 ±10) [2]
	PG		º Ȯ y Ë <n ȮϤ!

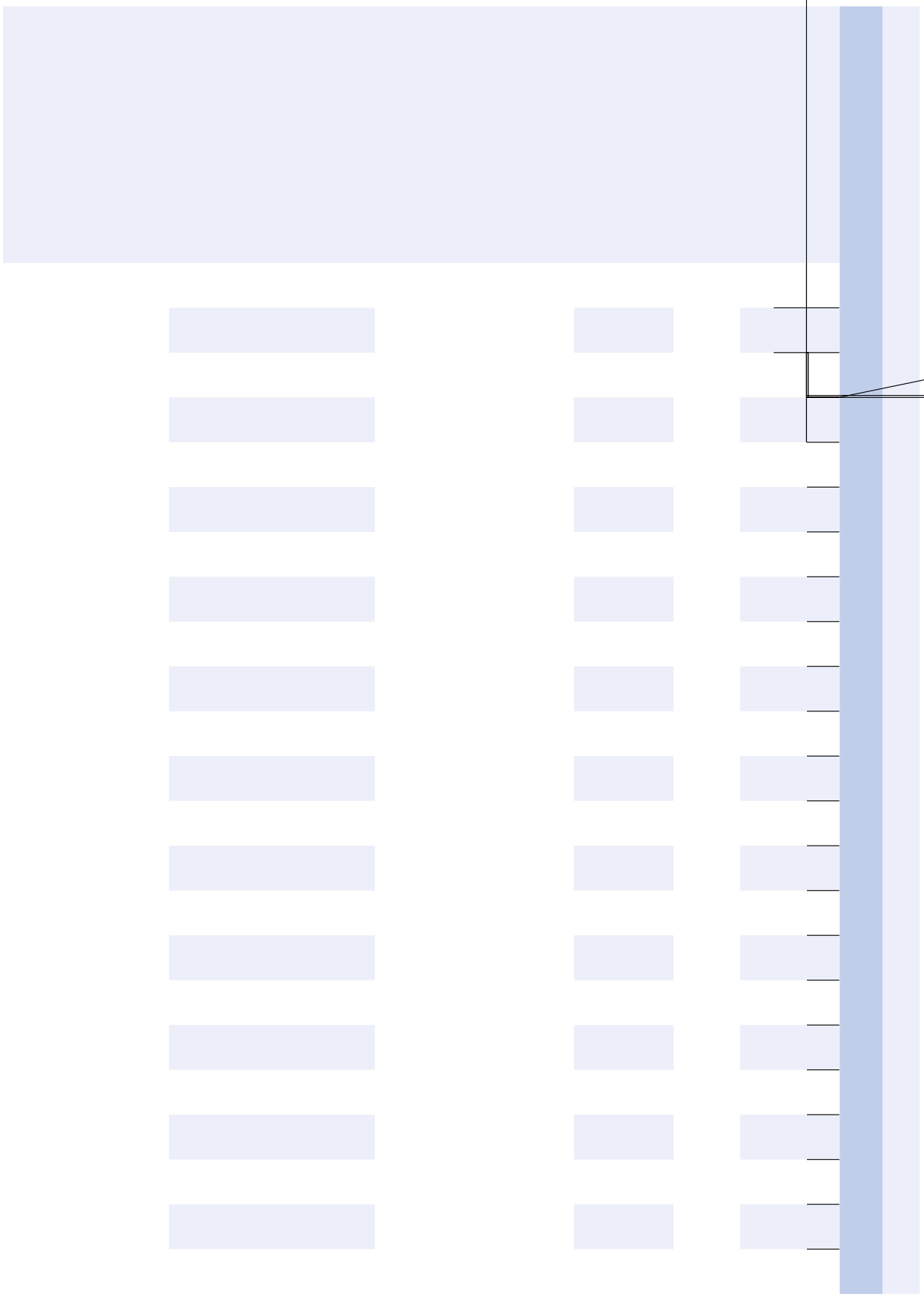

	kW												
	B	A		H	H1	H2	W	W1	W2	D	t	d	
VM06-0015-□4	1.5	0.75	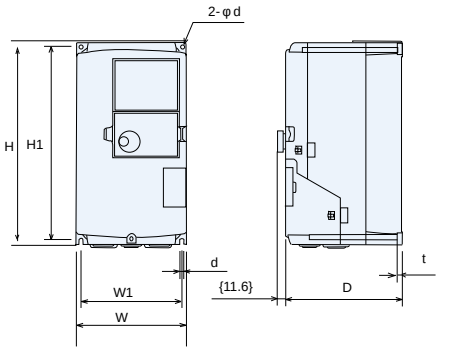	280	266	-	150	138	-	160	7	M5	4kg
VM06-0022-□4	2.2	1.5											
VM06-0040-□4	4	2.2											
VM06-0055-□4	5.5	4											
VM06-0075-□4	7.5	5.5		300	286	-	200	187	-	195	7	M5.5	6kg
VM06-0110-□4	11	7.5											
VM06-0150-□4	15	11		330	316	-	220	208	-	195	7	M5.5	7kg
VM06-0185-□4	18.5	15											
VM06-0220-□4	22	18.5	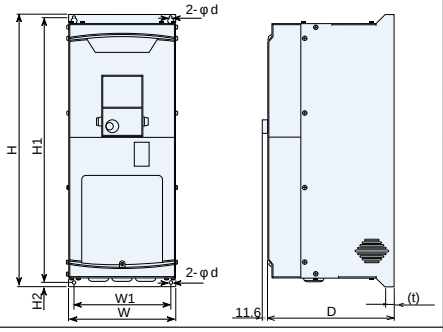	610	593	10	240	216	-	283	20	M7	19kg
VM06-0300-□4	30	22											
VM06-0370-□4	37	30											
VM06-0450-□4	45	37		740	722	10	280	256	-	295	20	M8	35kg
VM06-0550-□4	55	45											
VM06-0750-□4	75	55		810	786	12	320	290	-	318	30	M12	45kg
VM06-0900-□4	90	75											
VM06-1100-□4	110	90	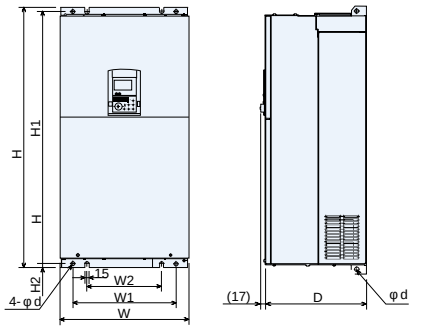	900	870	15	350	250	140	340	-	M15	62kg
VM06-1320-□4	132	110											
VM06-1600-□4	160	132		1010	980	15	500	400	290	380	-	M15	110kg
VM06-2000-□4	200	160											
VM06-2200-□4	220	185											
VM06-2500-□4	250	200		1010	980	15	680	580	470	380	-	M15	140kg
VM06-2800-□4	280	220											
VM06-3150-□4	315	250											

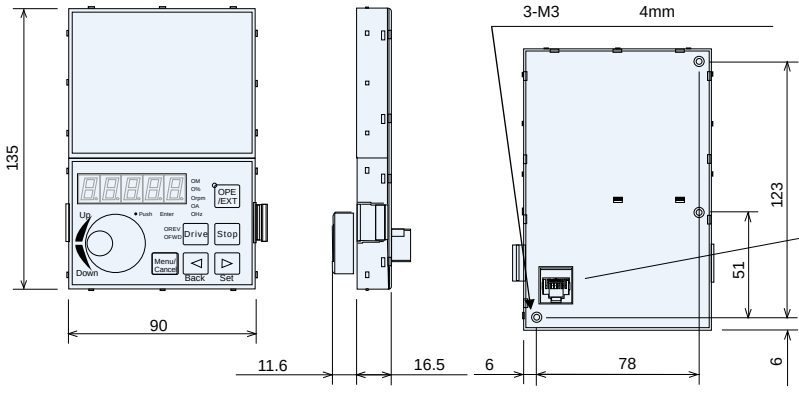

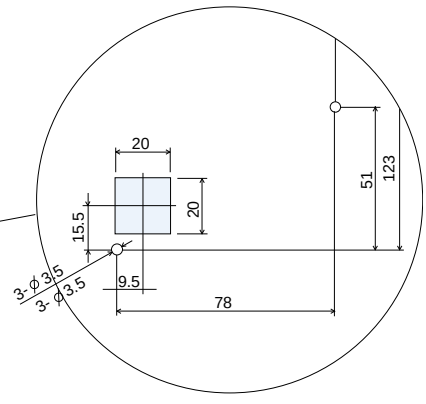

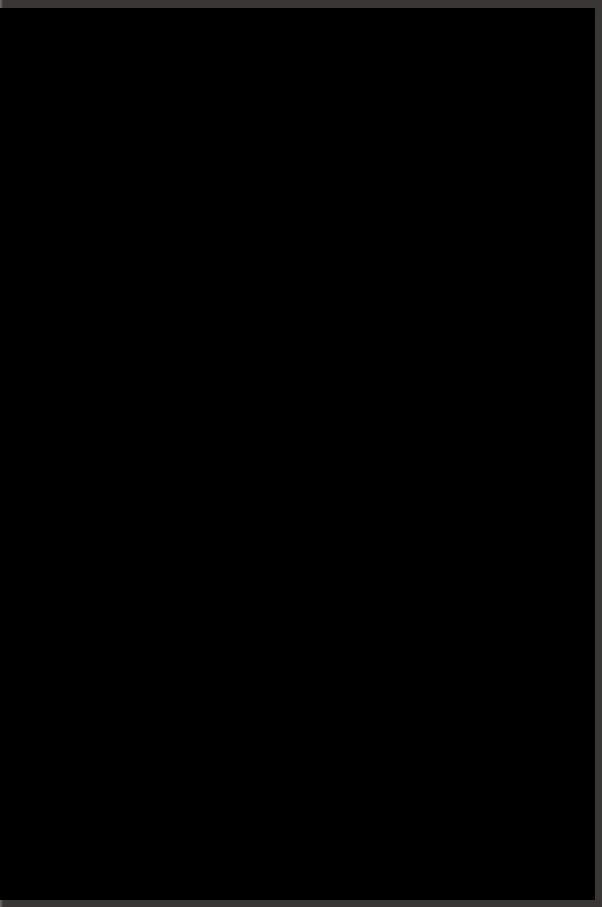

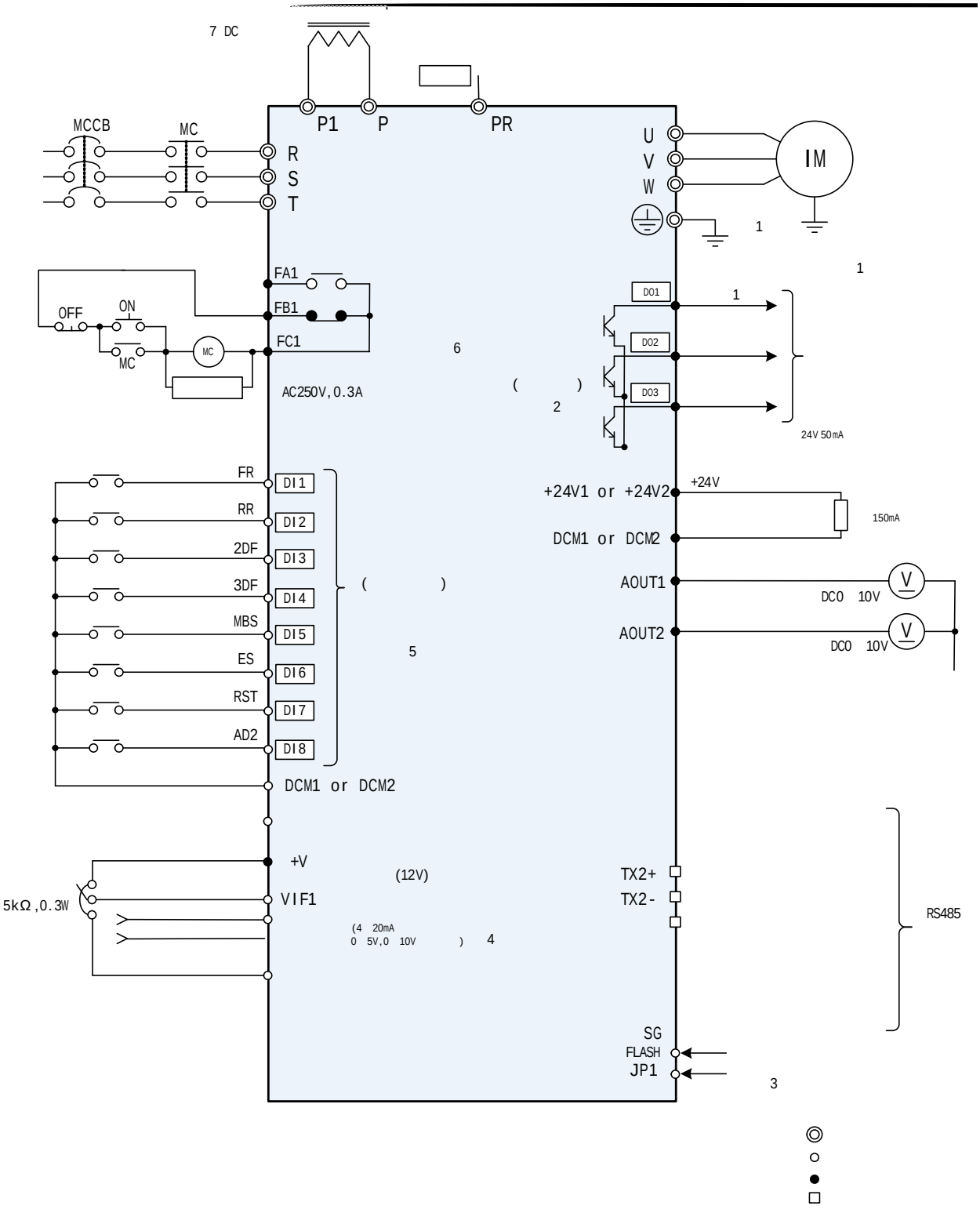
7 DC
P1
P
PR
MCCB
MC
R
S
T
U
V
W
IM
1
1
FA1
FB1
FC1
OFF
ON
MC
MC
AC250V, 0.3A
6
( )
2
DO1
DO2
DO3
1
24V 50mA
FR
RR
2DF
3DF
MBS
ES
RST
AD2
DI1
DI2
DI3
DI4
DI5
DI6
DI7
DI8
( )
5
DCM1 or DCM2
+24V1 or +24V2
+24V
150mA
DCM1 or DCM2
AOUT1
AOUT2
DC0 10V
DC0 10V
V
V
+V
(12V)
VIF1
5kΩ, 0.3W
(4 20mA
0 5V, 0 10V)
4
TX2+
TX2-
RS485
SG
FLASH
JP1
3

PG		SC-PG1	(PG) · PG · A B ( ) · · PG +5V	Vm06
	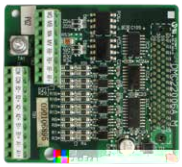	SC-PG2	(PG) · / PG · A B · · PG +12V	
		SC-PG3	(PG) · / PG · A B · · PG +24V	
		SC-WS	PID PLC 7	Vm06-0900
PROFIBUS		SC-PB2	PROFIBUS PROFIBUS	Vm06

: 2

1 2		SC-PG1	SC-PG2	SC-PG3	SC-WS	SC-PB2
	-	○	○	○	×	○
SC-PG1	○	×	×	×	×	○
SC-PG2	○	×	×	×	×	○
SC-PG3	○	×	×	×	×	○
SC-WS	○	×	×	×	×	×
SC-PB2	○	○	○	○	×	×

SC-WS SC-PB2 2 ○ ×

www.sankenld.com

&

899 6 (201203)

(021) 63756555
(021) 63756816

KL1-V07CB3-211000MD
2021.10

214425

( )

三 墾 力 達